Joanna - OG Tassel

Wall Art

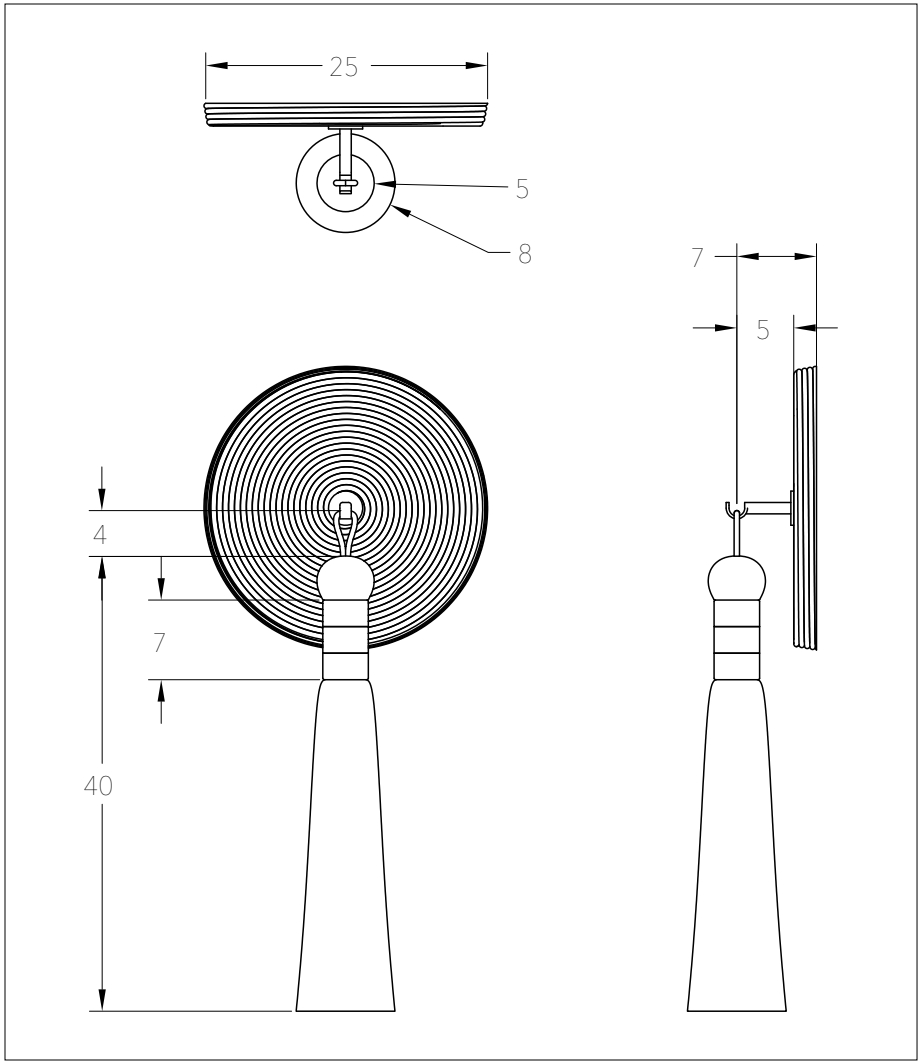

Dimensions:

Disc	Diameter 25″
Tassel	40″

Weight:

Certifications: • FR treatment available

Make this Joanna Wall Art your own!

- See our standard material and colors
- Custom capabilities available, please inquire

© 2017 M2C STUDIO LLC